INTERNATIONAL AVIATION MEET NUMBER

AIRCRAFT

Vol. 1 NOVEMBER, 1910 No. 9

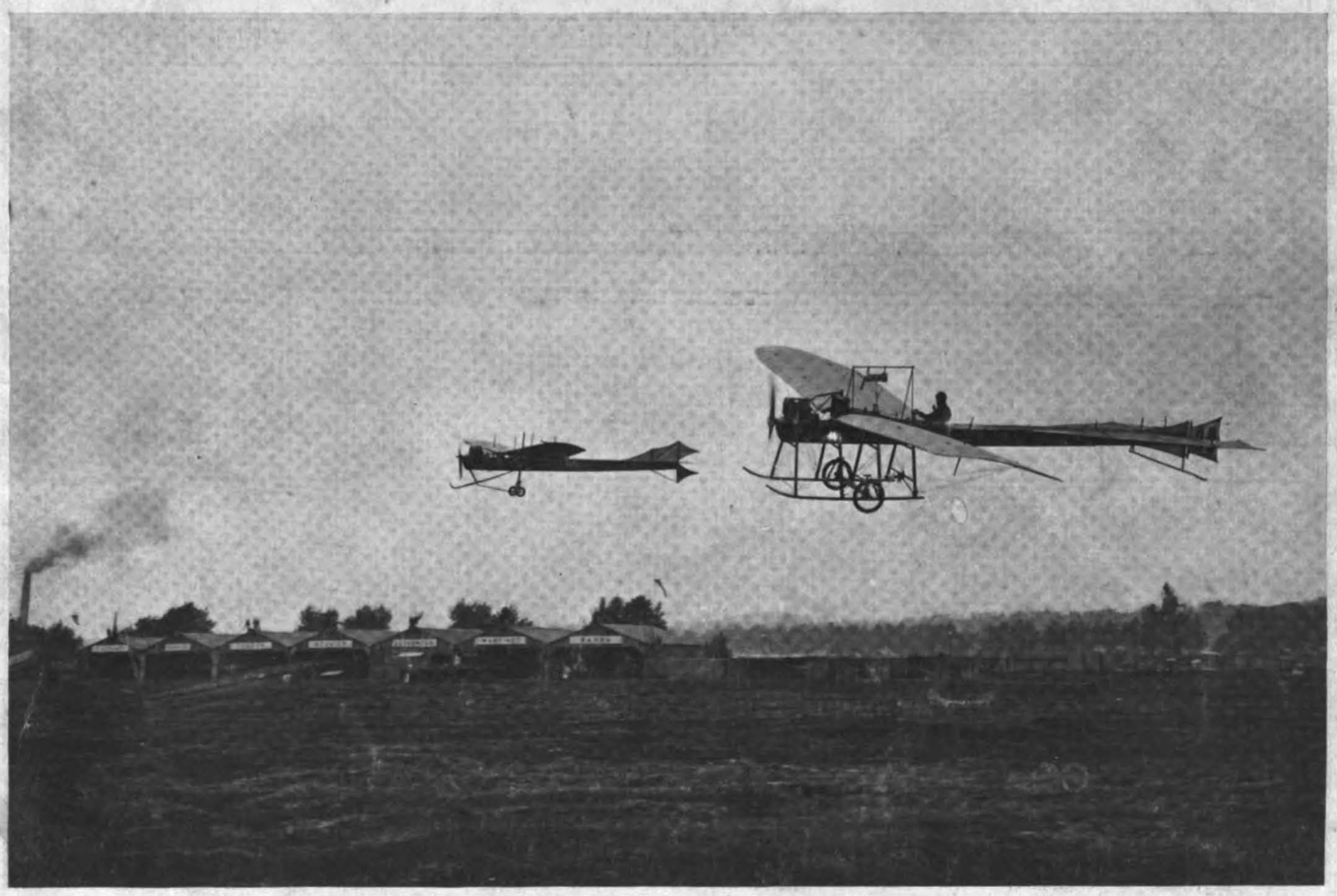

LATHAM AND MARTIN IN NECK AND NECK RACE

15 CENTS A COPY

EDITED BY ALFRED W. LAWSON

$1.50 A YEAR

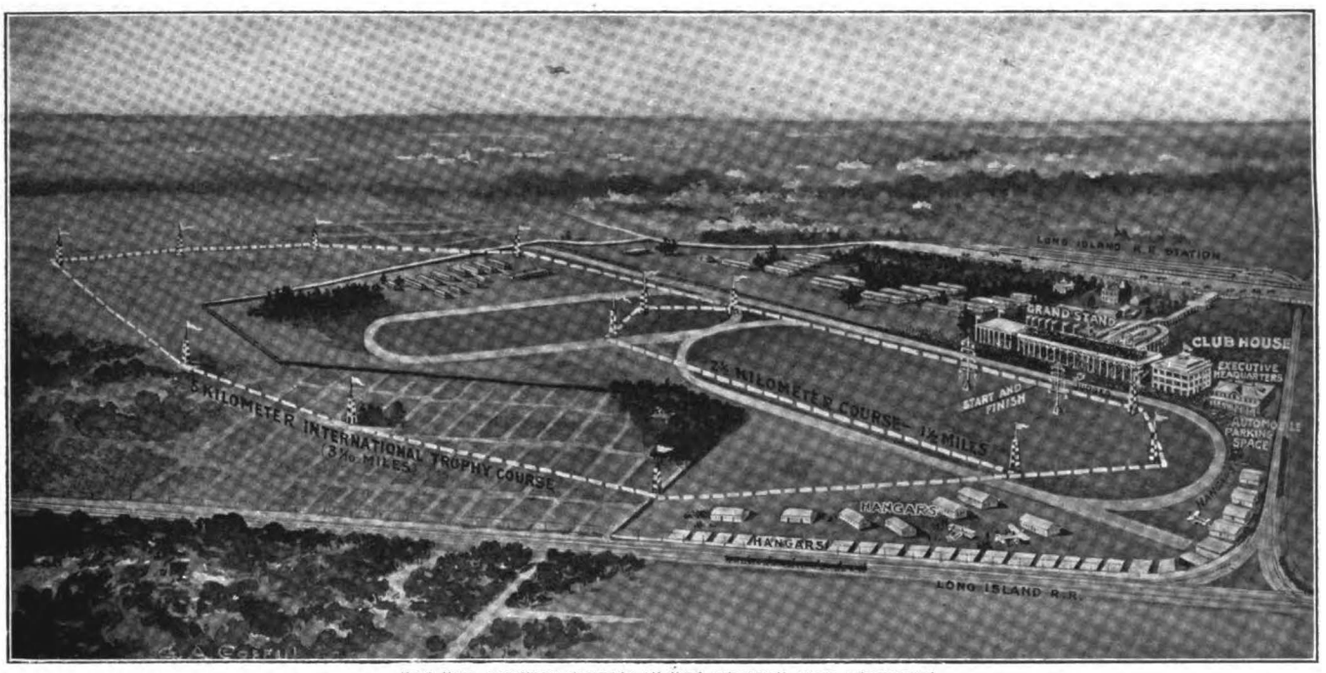

THE TWO AVIATION COURSES AT THE BELMONT PARK AERODROME.

The short, hexagonal course and 48% of the long course present a good landing surface; the balance of the long course is over more or less rough country.

When flying, aviators will leave the pylons on their left, in other words will circle the courses in the direction contrary to that of the hands of a clock.

The long course, which will be used for the Elimination Race to determine the American Team in the Gordon Bennett Cup Race, on October 26th, and for the Cup Race itself, on October 29th, is five kilometres long, the distances between pylons being 1371,72 metres, 385 m., 376,09 m., 276,04 m., 683,97 m., 390,61 m., 527,56 m., 534,01 m., 160 m. and 295 m. (Total: 5000 metres.) The six sides of the short two-and-a-half kilometre course, which will be used for all other aerodrome-events, are respectively 770 metres, 171,92 m., 143,45 m., 959,63 m., 160 m. and 297 m. (Total: 2500 metres.)

CONTENTS—NOVEMBER, 1910

AIRCRAFT

Published Monthly by The Lawson Publishing Company

ALFRED W. LAWSON
President and Treasurer

37-39 EAST 28th STREET, NEW YORK, U. S. A.
Telephone, 5017 Madison Square

ERNEST C. LANDGRAF
Secretary

TERMS TO SUBSCRIBERS

In the United States, Mexico, Puerto Rico, Guam, Philippine Islands, Hawaiian Islands, Cuba (including Postage), $1.50 per year.
Fifteen Cents the Copy, of All News Dealers.
Foreign Subscriptions, Two Dollars per year.
In changing order give old as well as new address.
Advertising copy must be in hand by the 1st of month previous to date of publication.
Only high-grade advertisements of thoroughly reliable firms are solicited.

WHEN YOUR SUBSCRIPTION EXPIRES

One month before a subscription expires we enclose a renewal blank on which you will write your order for the renewal.
WHEN FIRST NOTIFIED that your subscription will expire, you should send your renewal AT ONCE, in order not to miss a number. New subscriptions which are received by us on or before the 15th of any month will begin with the issue of that month. If received after that date they will begin with the following month's issue. We cannot enter subscriptions to begin with back numbers. One month's notice is necessary before a change of address can be made.

Entered as "second-class matter" February 18, 1910, at the Post Office, at New York, N. Y., under Act of March 3, 1879.

AIRCRAFT

Vol. I. No. 9 New York, November, 1910 15 CENTS A COPY $1.50 A YEAR

The French Team in the Gordon Bennett Cup Race

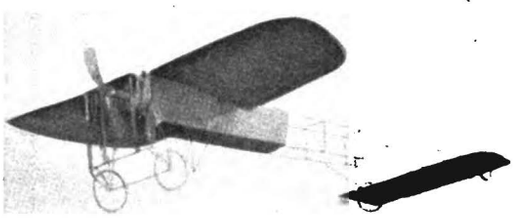

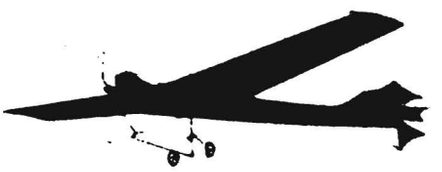

Alfred Leblanc, Hubert Latham and Réné Thomas are the formidable aspirants to world-championship honors, whom France is sending across the Atlantic as her challenging team to "lift" the Gordon Bennett Cup.

The French eliminatory trials (see AIRCRAFT for August and September) were held at Rheims on July 5th, over the full Cup-race distance of one hundred kilometres (62.14 miles), resulting as follows:

First—Leblanc, 50 H. P. Gnôme-driven Blériot monoplane; 1 hour 19 minutes 13 3-5 seconds.

Second—Latham, 50 H. P. Antoinette monoplane; 1 hour 24 minutes 58 3-5 seconds.

Third—Labouchère, 50 H. P. Antoinette monoplane; 1 hour 25 minutes 24 seconds.

In the above remarkable picture (taken during this race) not only are the three successful candidates caught on a single plate, but they are actually shown in the order in which they finished and qualified.

Labouchère has had to relinquish the honor of representing his country in the great international event of the year, having dislocated his knee a few weeks ago; the Antoinette Company have named Thomas to replace him. In the coming race Leblanc—world-famous, both as a balloonist and as an aviator—will drive a Blériot fitted with a 14-cylinder, 100 H. P. Gnôme motor; this combination has already shown a speed of well over 65 miles an hour. Latham—considered by many the greatest of all flying men—will drive a special Antoinette racer, fitted with a 16-cylinder 100 H. P. Antoinette motor; in its first trials, at the end of September, it is said to have shown a speed of nearly 70 miles an hour. Thomas, who recently covered over *thirteen hundred* miles in eight consecutive days flying, on a 50 H. P. Antoinette, will also have a 16-cylinder machine, if it can be got ready in time.

TABLE OF DISTANCES AT BELMONT PARK AND OF RECORDS WHICH MAY BE BROKEN THERE

Compiled by G. F. Campbell Wood

Short Course.	Long Course.	Kilometres.	Miles.	World's Records.	Holders.	Date on Which Made.
1 Circuit		2.5	1.553			
2 Circuits	1 Circuit	5	3.107	2′48⅖″	Léon Morane	July 10, 1910
3 "		7.5	4.66			
4 "	2 Circuits	10	6.214	5′42⅖″	Léon Morane	July 10, 1910
5 "		12.5	7.767			
6 "	3 "	15	9.321			
7 "		17.5	10.874			
8 "	4 "	20	12.427	12′38⅖″	Léon Morane	September 15, 1910
9 "		22.5	13.981			
10 "	5 "	25	15.534	15′50″	Léon Morane	September 15, 1910
12 "	6 "	30	18.641	*19′15″	Léon Morane	September 18, 1910
14 "	7 "	35	21.748			
16 "	8 "	40	24.855	*26′	Léon Morane	September 18, 1910
18 "	9 "	45	27.962			
20 "	10 "	50	31.068	*32′45″	Léon Morane	September 18, 1910
22 "	11 "	55	34.175			
24 "	12 "	60	37.282	39′32⅖″	Léon Morane	September 18, 1910
26 "	13 "	65	40.389			
28 "	14 "	70	43.496	46′19⅕″	Léon Morane	September 18, 1910
30 "	15 "	75	46.603			
32 "	16 "	80	49.71	53′05″	Léon Morane	September 18, 1910
34 "	17 "	85	52.816			
36 "	18 "	90	55.923	59′52⅖″	Léon Morane	September 18, 1910
38 "	19 "	95	59.03			
40 "	20 "	100	62.137	1 hr. 06′39⅕″	Léon Morane	September 18, 1910
50 "	25 "	125	77.671			
60 "	30 "	150	93.205	1 hr. 43′19⅗″	Emile Aubrun	September 14, 1910
70 "	35 "	175	108.74			
80 "	40 "	200	124.274	2 hrs. 18′18⅗″	Emile Aubrun	September 14, 1910
90 "	45 "	225	139.808			
100 "	50 "	250	155.342	*2 hrs. 56′30″	Emile Aubrun	September 16, 1910
110 "	55 "	275	170.877			
120 "	60 "	300	186.411	*3 hrs. 33′	Emile Aubrun	September 16, 1910
130 "	65 "	325	201.945			
140 "	70 "	350	217.479			
150 "	75 "	375	233.014			
160 "	80 "	400	248.548			
170 "	85 "	425	264.082			
180 "	90 "	450	279.616			
190 "	95 "	475	295.151			
200 "	100 "	500	310.685			

* These times are approximate, the figures for intermediary distances not being available at this writing.

The long course (5 kilometres circuit) will be used in the Gordon Bennett Cup and Elimination race, and also for the Michelin Cup race; the short course (2½ kilometres circuit) will be used for all other distance and speed events (see page 315), except for the cross-country contests.

The 5 and 10 kilometres records were made at Rheims; the others at Bordeaux; the aerodrome at Rheims was 5 kilometres in circuit; that at Bordeaux 2½ kilometres. The records made at Rheims were attained on a 100 H. P. Gnôme-Blériot monoplane; those at Bordeaux on 50 H. P. Gnôme-Blériots.

Other World's Records in Danger.

DURATION—5 hrs. 03′05⅕″, Jan Olieslaegers, Rheims, July 10, 1910.
DISTANCE—392.75 kilometres (244.043 miles), Jan Olieslaegers, Rheims, July 10, 1910.
ALTITUDE—2.800 metres (9,186 feet), Henri Wynmalen, Mourmelon, October 1, 1910.
SPEED—106.888 kilometres (66.417 miles) an hour, Léon Morane, Rheims, July 10, 1910.
DISTANCE IN GIVEN TIME—
One hour—90 kilometres (55.9 miles), Léon Morane, Bordeaux, September 18, 1910.
Two hours—172.5 kilometres (105.6 miles), Emile Aubrun, Bordeaux, September 14, 1910.
Three hours—252.5 kilometres (156.9 miles), Emile Aubrun, Bordeaux, September 16, 1910.
Four hours—†317 kilometres (197 miles), Emile Aubrun, Bordeaux, September 16, 1910.
Five hours—390.25 kilometres (242.5 miles), Jan Olieslaegers, Rheims, July 10, 1910.

† This distance was made in a flight of only 3 hrs. 45′30″, but no other aviator has flown as far in four hours.

Olieslaegers and Aubrun drove 50 H. P. Gnôme-Blériot monoplanes; Morane a 100 H. P. Gnôme-Blériot for the Speed Record, and a 50 H. P. Gnôme-Blériot for the One-Hour Record; Wynmalen a 50 H. P. Gnôme-Henry Farman biplane.

HOW TO GAUGE THE FLYERS' SPEED AT BELMONT PARK.

Time Over One Circuit of Short Course	Time Over One Circuit of Long Course	Speed Per Hour in Kilometres.	Speed Per Hour in Miles.
1′09¼″	2′18½″	130.	80.778
1′09 9/10″	2′19⅘″	128.748	80.
1′12″	2′24″	125.	77.671
1′15″	2′30″	120.	74.564
1′19 9/10″	2′39⅕″	112.654	70.
1′20″	2′40″	112.5	69.905
1′25″	2′50″	105.882	65.792
1′30″	3′	100.	62.137
1′33⅓″	3′06⅖″	96.561	60.
1′35″	3′10″	94.737	58.867
1′40″	3′20″	90.	55.923
1′45″	3′30″	85.714	53.26
1′50″	3′40″	81.818	50.839
1′51⅘″	3′43 7/10″	80.467	50.
1′55″	3′50″	78.261	48.629
2′	4′	75.	46.603
2′05″	4′10″	72.	44.739
2′10″	4′20	69.231	43.018
2′15″	4′30″	66.667	41.425
2′19⅕″	4′39⅗″	64.374	40.
2′20″	4′40″	64.286	39.945
2′25″	4′50″	62.068	38.567
2′30″	5′	60.	37.282
2′35″	5′10″	58.065	36.08
2′40″	5′20″	56.25	34.952
2′45″	5′30″	54.545	33.893
2′50″	5′40″	52.941	32.896
2′55″	5′50″	52.	32.311
3′	6′	50.	31.068
3′05″	6′10″	48.649	30.229
3′06⅖″	6′12⅘″	48.28	30.
3′10″	6′20″	47.105	29.27
3′15″	6′30″	46.154	28.679
3′20″	6′40″	45.	27.962

THE INTERNATIONAL AVIATION MEET

Belmont Park, New York, October 22d-30th

By G. F. Campbell Wood

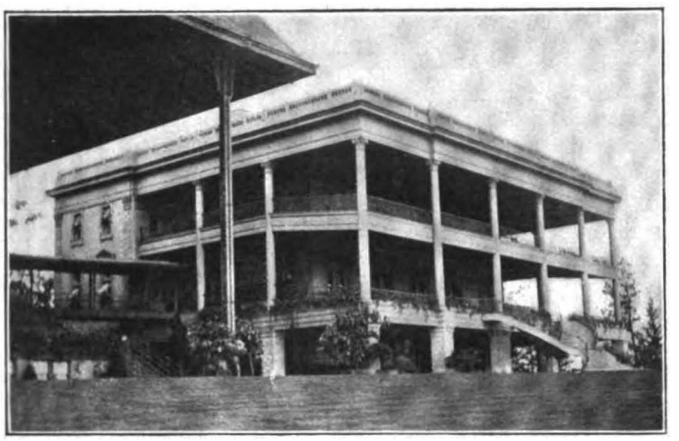

CLUB HOUSE AT BELMONT PARK.

FOR the vast majority of those who will attend the International Aviation Meet at New York, the experience of competitive flying on such a scale will be a novel one.

It may thus be of interest to establish just what position this big aerial tournament—the greatest of its kind as yet held in this hemisphere—occupies in the brief history of organized aviation competitions.

THE MEET'S PLACE IN AVIATION HISTORY.

A few days after Henry Farman had succeeded—in November, 1907—in making a straightaway flight of nearly half a mile, it was reported in European newspapers that the organizing committee of the Turin Exposition of 1911 had decided to set aside an appropriation for competitions among air-craft heavier-than-air.

This was hailed as a bold and somewhat premature venture, although the more enthusiastic hazarded the opinion that in the four years intervening before the Exposition, progress in aviation *might* be sufficient for the contest to actually come off.

It was just about this time, however, that things aeronautic began to move with the bewildering rapidity which has taken the world's breath away and, as yet, given it no respite to regain it.

Before the close of 1907 it was already suggested that competitions could be organized in the ensuing year, the go-ahead Belgian watering place of Spa announcing $10,500 in prizes for contests to be held in the Summer of 1908. Even before Farman won the Deutsch-Archdeacon Prize for a circular kilometre flight, strenuous efforts were being made in several quarters to have exhibitions by those pioneers: Blériot, H. Farman, Delagrange, Esnault-Pelterie, Captain Ferber, as a sort of side-show to the big automobile event of the year, the Grand Prix of the Automobile Club of France, which was held for the last time at Dieppe, in July 1908.

The next place to announce aviation contests was Spa's French rival as a famous resort: Vichy, which promised $4,000 for the flying men, and a little later, Munich, Bordeaux and Venice announced aeroplane competitions for the Summer and Autumn of 1908, but neither at Spa nor at Vichy, any more than at Dieppe or at Bordeaux, at Munich or at Venice, did the few flying men of the time perform!

The first paid exhibitions were those of Henry Farman at Ghent and of Léon Delagrange at Rome, in May, 1908, the former coming subsequently to New York (Brighton Beach) and the latter visiting Milan and Turin before returning to Paris, but the first open competition was without doubt that of Kiel, Germany, and like the first open competition for automobiles—held just nineteen years previously—the starters numbered exactly....*one*.

It was on June 28, 1908, that Ellehammer, the Danish aviator who claims to have flown in 1906 before Santos-Dumont, made there the "flight" of 160 feet, which gave him the first prize offered for open competition at an aviation meet. The prize was 4,000 reichmarks, say one thousand dollars.

No other competitions materialized in 1908, the latter half of which was made memorable by the demonstrations of the Wright brothers at Fort Myer and Le Mans.

Toward the end of the year a company was formed in Paris of which Léon Delagrange was an active member, to organize contests at the very doors of the French capital, at Juvisy.

The opening of the aerodrome was put off several times and finally took place in the Spring of last year, several events being held there on consecutive Sundays, and two subsequent martyrs to the cause, Captain Ferber (flying under the pseudonym of De Rue) and Léon Delagrange, contributing mainly to their success.

In the meanwhile—in December, 1908—James Gordon Bennett

GORDON BENNETT TROPHY.

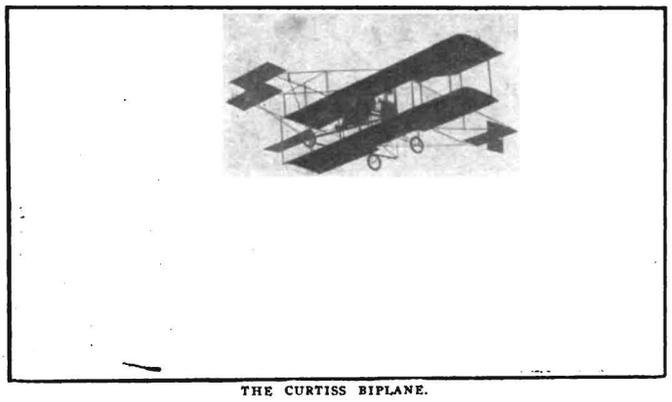

THE CURTISS BIPLANE.

had offered a Challenge-Trophy for International Competition—similar to the Automobile and Balloon trophies bearing his name; it was decided to hold the first contest for it near Rheims in the ensuing August and to make it the main event of a week's flying tournament.

Rheims-1909 was thus the first great meeting of the bird-men, although it had been preceded by Douai (July 12-19, 1909) where Blériot and Paulhan were the stars, and by Vichy (July 25-August 2, 1909), where Tissandier and the above-named Paulhan had a battle royal for supremacy and where a "totalization of duration" contest was held for the first time.

The big tournament at Rheims was a revelation to the whole world and was followed by innumerable meetings all over Europe, Brescia, Berlin, Cologne, Frankfort, Ostend, Blackpool, Doncaster, Juvisy, Spa, Antwerp, etc., etc.

In America, the Aeronautic Society, at New York, had endeavored to organize flying contests at the Morris Park racetrack in the Fall of 1908 and again in the Spring of last year, but with the exception of Glenn H. Curtiss and his Herring-Curtiss biplane fitted with a Curtiss four cylinder motor, neither men, machines nor motors had previously accomplished any performance warranting the probability of a successful demonstration, especially on the ill-adapted grounds selected for competition.

Leaving aside Henry Farman's ill-success in 1908, Curtiss and, later, Charles ~~F. Willard were~~ the first to undertake bonā fidē exhibitions of flying on this side of the Atlantic, but it needed just such a stirring and startling event as the great American triumph in Europe to shake the lethargy and destroy the scepticism prevailing here, and it may be said that the lifting of the Gordon Bennett Cup by the Aero Club of America's champion, last year, was the starting point of the interest now manifested in flying competitions all over the country.

The meet held at Los Angeles in the first days of the present year gave a foretaste of what might be expected when the time came to defend the Cup and the recent tournament at Boston, to say nothing of innumerable meets and exhibitions held in almost every state and in Canada, showed the steady spread of the movement.

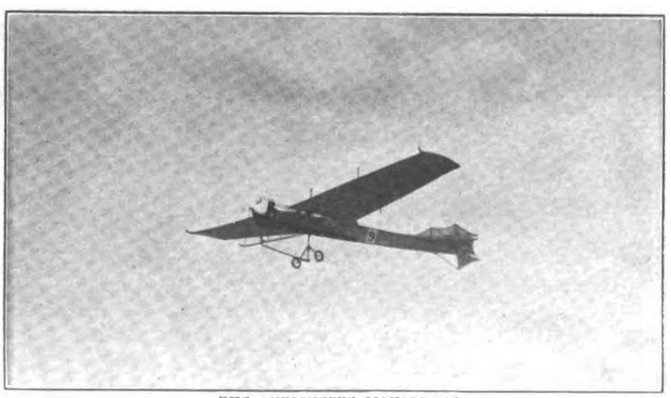

THE ANTOINETTE MONOPLANE.

The time for the defense of the Gordon Bennett Cup against the European challengers was set for the latter half of October and later, definitely fixed to the ante-penultimate day of the month—October 29th.

On that day three representatives of the Aero Club of America battle for the further possession of the trophy against the six representatives of the challenging Aero Clubs of France and Great Britain.

THE DEFENSE OF THE CUP.

According to the rules for the year, the contest consists in individual trials against time over a distance of one hundred kilometres (62.14 miles) landings being permitted, but only one trial being allowed, the first crossing of the starting line in flight by the contestant, after due notification that he is making his attempt for the Cup, being timed at his start. No time-limit is set, to cover the distance.

The minimum perimeter of the course allowed is five kilometres (3.11 miles) and the event will be decided at Belmont Park over a course of just this length. Seven hours are allowed each contestant in which to make a start and an hour and a half before sunset is the latest time at which a contestant may cross the line.

As sunset at New York on October 29th occurs at 5.02, the starting time allowed competitors will extend from 8.32 A. M. to 3.32 P. M.

Although the Gordon Bennett Cup may be competed for until November 15th, it is very obvious that when the seven hour rule was made it was with the idea that the race would be held earlier in the year, at a season when sunset occurs two or three hours later.

The foreign Aero Clubs will certainly not agree to cut down the time allowed competitors to start in, which means, that if propitious weather conditions occur in the early morning, the great event may be all over by ten o'clock and be run off before a mere handful of spectators compared to the crowd which the afternoon is expected to bring forth.

In the Elimination Contest, which takes place October 26th, to designate the American team, the course, distance and starting rules are the same as for the big event, except that only two hours are allowed contestants wherein to start (from 1.30 to 3.30); the contest will, however, be considered at an end at 5 P. M., at which time competitors still flying will be classed according to the number of full laps covered.

As to who are going to qualify for America and have the honor to defend the Cup, the largest of question-marks is here in order.

Those who are going to try for the team will only be known a few days before the race; at this writing—October 10th—it is not even known if Curtiss will avail himself of the invitation extended to him to defend the Cup he won for his country last year,—in other words whether two or three men are to be selected through the Elimination race.

It is known, however, that Curtiss has had two machines built especially for the contest, one of entirely novel design.

If the flyers of the Curtiss team are entered, C. F. Willard, J. C. Mars, E. B. Ely, A. Post, J. A. D. McCurdy and G. F. Russell, will no doubt toe the mark—if such an expression may be used in this instance.

At this date the new double-surface Curtiss with rear ailerons and monoplane elevator is the fastest machine of this type; it is usually driven by Curtiss himself, although at present Ely is driving it in his Chicago-New York attempt; other eight cylinder Curtisses are Willard's large passenger-carrier, Russell's new biplane and last year's famous Cup-winner itself, which after being flown by Curtiss in Europe and in California and by Hamilton all over the country (notably in the New York-Philadelphia flight) is now handled by either Mars or Ely.

Probably the greatest speed performance realized on a Curtiss biplane was when Curtiss himself flew against Grahame-White on September 15th; he used a Hendee motor on this occasion;

his speed straightaway cannot have been much under a mile a minute.

If Curtiss elects to defend the Cup, the challengers will do well to consider him, as there are not many known instances on which Glenn H. Curtiss did not accomplish what he set out to do.

Another who might have given a good account of himself is T. Shriver, who has recently learned to pilot his Kirkham-driven Dietz-Shriver biplane with such dexterity; he, however, broke his ankle on October 4th,—and may not be able to compete, although he claims he will be in condition to fly and will have a new 100 H. P. motor at his disposal.

Captain Thomas A. Baldwin and J. J. Frisbie are others likely to try to qualify; Baldwin has a new double-surface machine which should prove considerably faster than his older biplane.

Concerning the Cup-defending plans of the Wright brothers little is known although rumors of high-speed biplanes and monoplanes being built for the event occasionally come from Dayton. The fact that Wright biplanes have not shown great speed, in no way proves that the great pioneers cannot turn out a racer; the problem of speed is a minor one compared to some they have already solved and the remarkable utilization of their carrying-surface augurs well for any attempt made by them to turn out a racer.

Should such a racer materialize, the men are not lacking to drive it; Brookins, Johnstone, Hoxsey, Coffin, La Chapelle, Parmelee, are flyers of no mean ability; more than anybody since the late Ernest Lefebvre, can Brookins make the most of the Wright biplane's wonderful capabilities to take sharp turns. while Johnstone and Coxsey are stayers of no mean order, as their American records for duration and distance show.

One man remains to be spoken of among the favorites for the American team who drive American-built machines: Charles Keeney Hamilton.

As an aeroplane-pilot the writer ventures the opinion that none greater at the present day exists than Hamilton, and this is said advisedly, after seeing such men as Latham, Morane, Paulhan, Leblanc, Aubrun, Mamet, Simon, Legagneux, Martinet, Dickson, Drexel, Grahame-White, Moisant, Grace, M. Farman, Tabuteau, and many others, in action on both sides of the Atlantic.

Hamilton has recently been using a biplane built after his own design and known as the "Hamiltonian." He has in turn used two motors on this machine: a 70 H. P. Hall-Scott and a 115 H. P. engine built by Christie of "front-drive" fame in the automobile world.

The speed attained by the Hamiltonian when propelled by the bigger engine is nothing short of sensational, and must be considerably in excess of a mile a minute.

With all his skill, Hamilton has some difficulty in making clean landings in this latest juggernaut—which is very much: engine and very little: wings—and recently had a nasty smash (September 9th) at Sacramento, which, it was thought at the time, would incapacitate him for the International Meet. He is about, however—hobbling and cheerful—and has already driven his latest speed-product at Garden City.

Among Americans driving foreign-built machines, Drexel, Moisant, Harmon and Harkness are those whom New Yorkers are likely to see in flight at the big meet.

Armstrong Drexel, of the well-known Philadelphia family, has done practically all his flying in England, and has proved himself to be one of the very best of Blériot drivers; he was the first man to rise 2,000 metres into the air (last July, at Lanark) and this feat has since then been exceeded by but four other aviators.

If he has the use of a 100 H. P. Blériot, he should prove a valuable recruit in the Cup-defending camp.

Moisant, the Chicagoan who carried a passenger from France to England is also a Blériot pilot of note: he has recently supplemented his cross-country capabilities by some aerodrome racing at Folkestone.

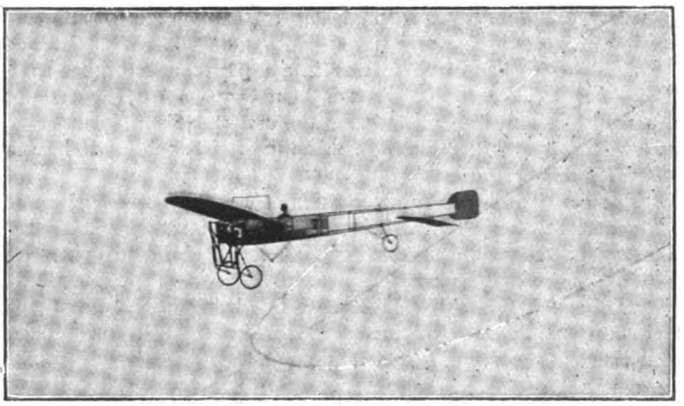

THE BLÉRIOT MONOPLANE.

Clifford B Harmon, the millionaire amateur, also has two machines; his old Henry Farman—Paulhan's Los Angeles record-breaker—has been almost entirely renovated since his Boston accident, and he is having built a monoplane to carry his two 50 H. P. Gnôme motors harnessed together; he is also credited with having acquired a racing Blériot.

Harry Harkness is an Antoinette pilot who learned to fly last winter; he has two of the graceful monoplanes: a single-seater and two-seater, but has not succeeded as yet in getting out of them what one is entitled to expect of the machines and of the man; that is partly owing to the points differentiating the control of his present machines from that of the one on which he learn to fly, entailing the acquisition of new reflexes.

Harkness's Antoinettes are most up-to-date flyers, but of course cannot compare in speed with the 16 cylinder racer of this make which Latham is to drive at the Meet. Harkness's two-seater is to be fitted with an Emerson engine: he also is said to be importing another machine.

THE FOREIGN INVASION

The foreigners making the transatlantic trip, to fly at Belmont Park, are all stars of the first magnitude in the aeronautic firmament, but some of them stand out even among this brilliant galaxy and outshine their fellow-invaders as stellar performers; among these may be cited the crack French monoplane-pilots who are coming with the firm resolve of "lifting" the Gordon-Bennett Cup.

It was expected that the well-nigh invincible combination of Blériot and Gnôme would sweep the board in the French "Eliminatoires" for the Cup, held at Rheims, and to the Antoinette company and its famous engineer, Lavavasseur—"papa" Levavasseur, as he is affectionately called among the bird-men,—all credit is due for qualifying two machines on the challenging team.

Leblanc, Latham and Labouchère were the original French team selected (see page 317) but Labouchère—who has flown

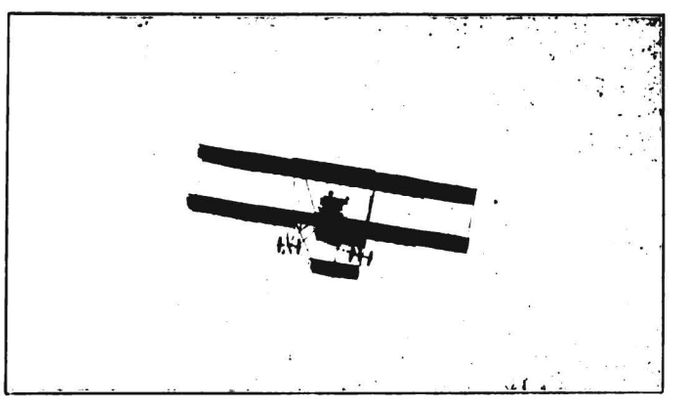

THE FARMAN BIPLANE.

further and longer in a single flight than any other Frenchman—dislocated his knee in a bad landing last August, and Thomas—who has flown further in a week than any other aviator—was selected to replace him. On October 1st Thomas was in collision with Captain Dickson the crack English biplane-pilot, at Milan, both being hurt; at this time it is doubtful if he can fly at Belmont Park.

The best Antoinette racers outside of Latham, Labouchère and Thomas, are not French, Wienczlers being German and Kuller, Dutch, but there are several good French Antoinette drivers to choose from to replace Thomas if necessary: de Robillard, Ruchonnet, Laffont, Gobe, the latter two being teachers of flying at Mourmelon. If Antoinette waives its right to third place on the team, Aubrun, the well-known Blériot pilot would be the logical choice for it.

Of Leblanc's 100 H. P. Blériot and Latham's 100 H. P. Antoinette it is hard to say which will go the faster; both carry abnormal engines—that is, abnormal at this time,—the Blériot a fourteen cylinder Gnôme (two 7 cylinder Gnômes harnessed together, one in front of the other) and the Antoinette a 16 cylinder Antoinette engine, which is probably more powerful than the Gnôme, although both are referred to roughly as being of 100. H. P.

When at Mourmelon six weeks ago, the writer had occasion to see the big Antoinette engine mounted on a bench; it is precisely similar to the 8 cylinder, but will need, of course, a greater length of condensing tubing, to keep cool throughout the fifty-five minutes the monoplane is expected to cover the Cup-race distance in.

If both the big motors—Gnôme and Antoinette—perform as their lower-powered models do, and the two monoplanes should show an equal speed, the Antoinette will have the advantage over the Blériot in drivers: Latham has no peer in getting around pylons, and notwithstanding the greater breadth of his racer, could beat any Blériot driver on a circular track—except the peerless Morane—provided the Antoinette were equal in speed to the smaller monoplane.

In a letter published in this magazine last month, the writer referred to the possibility of the rear set of the big Gnôme's cylinders not keeping cool: when he questioned Leblanc on the French Line pier, where he had gone to greet him on behalf of the Contest Committee, the great little Frenchman admitted that his longest flight on the speed-monster had not exceeded fourteen minutes, but expressed the hope that the cooling and lubrication of the motor might have been so improved since he left France that Blériot would feel justified in shipping the monoplane,—which, by the way, has shown a speed of nearly 76 miles an hour.

That these engines *can* run for a protracted period is shown by Morane's using one in his recent attempt for the Michelin Grand Prize, unfortunate though it was. Morane is also said to have flown for forty minutes with this big engine,—long enough to cover five-sixths of the cup-race distance.

Morane's accident on October 5th is a great loss for the International Meet, as he is about the most wonderful flyer to watch of any; he was not, however, on the French Cup-challenging team, the chances of which are therefore entirely unaffected by his absence.

Leblanc is not the natural bird-man that Morane is, but Blériot's first pupil and right-hand man can be counted on to give a good account of himself; he has been flying on Blériots now for fourteen months and usually has his machines in perfect shape, for what is expected of them.

As a cross-country driver he is of course without a peer and the winner of the Circuit de l'Est owes this largely to his vast ballooning experience: he is able to identify localities from above without trouble where novices in aeronautic experiences get hopelessly lost.

The second of the Circuit de l'Est: Emile Aubrun, the hero of the second Channel Crossing: J. de Lesseps (who only recently distinguished himself in Canada) the latest long-distance star: Simon, and the well-known flyer of the Borel company: Réné Barrier, are the other Frenchmen who will fly on Gnôme-Blériots in the various events of the International Meet.

With Morane injured and poor Chavèz gone—through perhaps the most pitiful aviation tragedy since Selfridge put his name at the head of the list of martyrs to the cause—,de Lesseps and Drexel, who have both risen to seven thousand feet, should have a great tussle for the altitude prizes—a tussle in which some good home-made American biplanes will without doubt join, to the possible discomfiture of the single-surface flyers, the small wings of which make the risk of reaching air too thin for efficient carburation and of the ensuing precipitous "glide" with the propeller idle, a rather serious one to the aviators's physical welfare.

Simon and Aubrun will "cover" the endurance contests and, if it can be so arranged that their effort will count outside their own country, may resume their duel for the Michelin Cup, begun a few weeks ago in Bordeaux.

Other French monoplanes to be driven at the meet, are two of the diminutive "Demoiselles," conceived by Santos-Dumont and built by Bayard-Clément. They will be handled by the best men in the world at driving them: Audemars and Garros; it is said Audemars will also bring over a Nieuport monoplane, one of the most interesting of the new French flyers: the diminutive Swiss bird-man will no doubt give a good account of himself.

The British team for the Cup will consist of James Radley, Alec Ogilvie and Claude Grahame-White, with McArdle, Drexel's partner in England, as substitute. There was also a question of Grace coming: we believe, however, that Grace is an American—one of the California Graces in fact.

Radley, Grahame-White and McArdle will drive Gnôme-Blériots, but it is doubtful at this writing if they will be 14-cylinder racers or not; if they are, Grahame-White's chance becomes very evident, as he is one of the best all-around aviators in the world; nearly all his flying has been done on Henry Farmans, but he first learnt to fly on a Blériot XII, the "White Eagle," and later piloted a Blériot XI, whilst the speed he showed around the Boston aerodrome was remarkable for a comparative novice at driving a high-speed Blériot.

Radley won a straightaway event at Lanark at 77 miles an hour; this means, of course, that a good eighteen to nineteen mile wind was blowing at his back, but the performance is interesting as showing that his machine was faster than any of the other Blériots there.

McArdle is a daring flyer who doesn't seem to care much what sort of ground he is flying over; had he Leblanc's facilities for "knowing where he was" he would make a great cross-country flyer—and may yet for that matter; he is liable to spring some surprises if his machine is tuned up to his satisfaction.

Alec Ogilvie is a staunch supporter of the original biplane: the Wright; he has driven Wright machines in England for some months now and with more than ordinary success. He has been at Dayton for several weeks, but not a whisper has come East of what is being hatched there. The Wrights are no doubt jealous of the world-wide reputation as secret-keepers they established some years ago and perhaps the world is to get just such another surprise from them as it did in 1908.

The Aéro-Club de France and the Royal Aero Club of Great Britain are the only foreign clubs to have sent over challengers for the Gordon Bennett Cup; the arrival of an Austrian team for the other events has been announced, Karl Illner and Adolph Warchalowski, to pilot Etrich monoplanes—the most bird-like aeroplanes in existence—and Baron Economo and Count Kolowrat at the helm of Henry Farman biplanes. The last named is a new comer, but the other three have done some fine flying in Austria, Illner in particular on the wonderful machine of Etrich (described elsewhere in this number of AIRCRAFT).

The writer is of the opinion, however, that none of these flyers will actually turn up.

On page 315 is a photo-plan of the Belmont Park courses which renders any description of them superfluous; the Gordon

Bennett Cup and the Elimination race as well as the Michelin Cup will be contested over the five kilometre course, the other distance and speed events will be held on the two and a half kilometre course.

One of the pylons on the latter course has since been moved, to make the course safer: it now forms the starting post as well as a turning-post.

The short course is a very good one and infinitely safer than the long one, which is really a cross-country course.

The regulations governing the Cup Race and the Elimination Contest have been referred to above; those under which the other events at Belmont Park are to be run are given below.

These events have been framed so as to provide a maximum of interest to the spectators and are mostly to take place at a given time of day; a few months ago it would have been out of the question to expect punctuality of aviators in contesting a given event, but with the constant betterment in machines and men and especially with such a standard of excellence in the entries received, this is not asking too much in anything like good weather. If some of the regulations strike the layman as offering unwarranted complexity it is because it has been sought to cover every possible contingency, where previously constant disputes arose in the interpretation of rules.

It might be pointed out that the rules and regulations which recently appeared in various newspapers and magazines have been almost entirely modified.

Those printed by this magazine are the correct ones and, to the spectator at Belmont Park, should lend added comprehension to what he is witnessing.

RULES AND REGULATIONS IN FORCE AT BELMONT PARK

All the events will be held under the rules and regulations of the Fédération Aéronautique Internationale.

The following is a list of the prizes offered, together with rules governing competition for same:

Gordon Bennett Cup	$ 5,000
Gordon Bennett Elimination	2,500
Hourly Distance	4,800
Hourly Altitude	4,800
Daily Totalization of Duration	5,950
Fastest Flight, Ten Kilometers	3,000
Grand Altitude	3,750
Grand Altitude, if World's Record	1,000
Aero Club of America Altitude Prize	5,000
Grand Speed	4,500
Cross-Country	3,400
Cross-Country Passenger Carrying	2,000
Passenger Carrying	1,600
Kilometer Straightway	1,700
Totalization of Duration	6,000
Totalization of Distance	3,000
Michelin Trophy, if unbeaten at end of year	4,000
Scientific American Trophy, value	2,500
Amateur Trophy, value	1,000
Mechanics' Prize	1,000
	$74,800

HOURLY PRIZES

HOURLY DISTANCE AND ALTITUDE CONTESTS

$9,600.00

$4,800 for Distance: 12 hours
First, $250 Second, $100 Third, $50
$4,800 for Altitude: 12 hours
First, $250 Second, $100 Third, $50

Except on the fourth and seventh days, one hour or more will each day be set aside for hourly distance and altitude prizes.

The Distance Prize will be awarded to the three aviators covering the greatest distance (in one or more flights) during the hour designated.

Aviators may leave the ground before the beginning of the hour; the distance will be credited to them from the first passage of the starting line made in flight after the beginning of the hour and until the last passage made in flight before the end of the hour, only entire laps being considered. Laps during which aviators have alighted, will not be credited to them.

The Altitude Prize will be awarded to the three aviators reaching the greatest altitude during the hour designated. The measurement of altitude will cease to be made at the end of the hour; contestants are, however, at liberty to start before the beginning of the hour.

If two hours are set aside for hourly contests on the same afternoon they will be separated by a suitable interval.

An aviator cannot compete in two consecutive hourly contests in a single flight; neither can he compete for distance and altitude in the same flight.

The beginning and ending of hours designated for hourly events will be signalled by a bomb or cannon; a similar signal will be given five minutes before such hours begin.

DAILY TOTALIZATION OF DURATION—

$5,950.00

$850.00—Seven Days
First —$500.00
Second— 250.00
Third — 100.00

This prize will be awarded in the above order daily, to the three aviators who shall remain in the air the greatest period of time, to be determined by adding together the time of all the flights (whether for distance or altitude) in the hourly events made during the day.

Duration will be credited to aviators making a flight for an hourly *distance* prize, from the time of their first passage of the starting line made in flight, until the time of the last passage made in flight, both passages to occur within the hour designated.

JAMES GORDON BENNETT.

Contestants in an hourly distance prize, who, at the time of the second signal (that indicating the beginning of the hour) are obviously in flight, will, however, be credited with duration from the beginning of the hour, irrespective of their position on the track at the time; similarly aviators obviously in flight at the time of the signal marking the close of the hour, will be credited with duration until the close of the hour, irrespective of their position on the track.

Contestants in hourly distance prizes landing before the close of the hour will in no case be credited, for the duration prize, with the time intervening between their last passage of the starting line and their actual landing.

Contestants alighting between two passages of the starting line will not be credited with the time elapsed between them.

Duration will be credited to aviators making a flight for an hourly *altitude* prize, provided they pass the starting line, after leaving the ground. It will be credited from this moment and until the moment of landing, providing this landing takes place within the precincts of the aerodrome, and prior to the end of the hour.

An exception will be made in the case of contestants in an hourly altitude prize who, at the time of the signal announcing the beginning of the hour are obviously in flight. There will be no necessity for them to cross the starting line to be credited with duration, which will be credited to them in this case from the beginning of the hour. Similarly, duration will be credited to the end of the hour should they be obviously in flight at the closing signal.

In the case of two or more aviators having the same totalization of duration to their credit at the end of the day's hourly contests, the prizes shall be divided accordingly.

FASTEST FLIGHT: 10 KILOMETERS—

$3,000.00

First —$1,500.00
Second— 1,000.00
Third — 500.00

To be awarded to the aviators who shall during the course of the meeting have made the fastest time for any four consecutive laps of the 2,500 metre course during hours assigned for hourly distance contests.

GRAND ALTITUDE PRIZE—$3,750.00

First —$2,000.00
Second— 1,000.00
Third — 500.00
Fourth— 250.00
$1,000 additional for World's Record.

To be awarded in the above order to the aviators who shall while contesting in an hourly contest for altitude throughout the course of the meeting, or during the special periods devoted to the prize, attain the highest altitudes; the additional prize of $1,000 will be added to the first prize if the winning effort beats the World's Record at the time it is made.

The periods specially devoted to this prize will be the last hour of the official flying hours during every day of the meet. Contestants may leave the ground at the time they please, but the same flight cannot count for both the special contest for Grand Altitude Prize and the hourly events preceding it.

There will be a suitable interval between the last hourly contest and the special contest for the Grand Altitude Prize.

AERO CLUB OF AMERICA ALTITUDE PRIZE—$5,000.00

A prize of $5,000 will be given to the winner of the Grand Altitude Prize provided the altitude attained is 10,000 feet or more.

GRAND SPEED PRIZE—$4,500.00

First —$3,000.00
Second— 1,000.00
Third — 500.00

This prize will be competed for in heats of three contestants, to be arranged by the Aviation Committee.

The distance shall be 25 kilometers (10 laps). At the hour fixed by the Committee for a heat the three machines will be on the starting line.

Contestants will be despatched one after the other, the winner being the contestant to make the distance in the shortest time.

At a given signal the engine of the first machine will be set in motion; one minute later at a second signal the first machine will start and the engine of the second machine will be set in motion; so also with the third.

Thus one minute will be given before the start for the engine of each machine to get going and machines will be despatched at one minute intervals.

No allowance will be made for time lost at the start and any contestant whose engine is not in motion within five minutes of the signal to set it going, will be disqualified.

Any contestant not in flight at the first pylon to be turned after the start will be disqualified. Landings are allowed but the performance of a contestant will be annulled if his time exceeds forty minutes, such forty minutes not to include the minute during which he is expected to have his motor set in motion, prior to his actual starting signal.

In case of two heats being held, the winners will meet in a final, governed by the same rules as the heats; the two second men in the heats will similarly meet to determine the attribution of the third prize.

In the case of three heats being held the winners will meet in a final. In the case of more than three heats and less than ten, semi-finals shall be held.

The preliminary heats will be held on the second day of the meet and the final on the last day; if semi-finals are necessary they will be held on the third day.

CROSS-COUNTRY FLIGHT—$3,400.00

$850.00—Four Days

First —$500
Second— 250
Third — 100

This prize is offered for a flight from the starting point around a given mark outside the course and return.

The prize will be awarded in the above order to the aviators making the best time. Contestants will be advised of the location of the outside mark prior to time of departure.

CROSS-COUNTRY PASSENGER-CARRYING PRIZE—$2,000.00

To be awarded the aviator who during the course of the meeting shall carry a passenger for a flight from the starting point around a given mark outside of the course and return in the best time. The passenger carried must be at least twenty-one years of age and weigh not less than 125 pounds. In case two contestants cover the course in the same time the prize will be awarded to the one carrying the greatest live weight, determined by adding together the weight of the aviator and the weight of the passenger.

PASSENGER-CARRYING PRIZE—$1,600.00

First —$1,000.00
Second— 400.00
Third — 200.00

To be awarded in the above order to the aviators who during the course of the meeting shall carry the greatest weight of passengers twice around the course of 2,500 meters. The weight of passengers will be determined by including the weight of the aviator and passengers carried, so as to make the total live weight carried by the machine. In case two machines should carry the same weight the prize will be awarded to the machine accomplishing the distance in the best time.

STATUE OF LIBERTY PRIZE

$10,000

Donated by Mr. Thomas F. Ryan.

This prize will be awarded to the aviator, who shall make the best elapsed time in a flight from the starting line at Belmont Park, around the Statue of Liberty in New York Harbor, and return to the starting line.

The prize shall be open to all aviators who shall have remained in the air in one continuous flight, one hour or more, during the previous contests in the International Aviation Tournament.

The contest will take place on Thursday afternoon, Oct. 27th; competitors will start between 2:45 and 3:45, during which period they are at liberty to start at the time they choose. The elapsed time of any aviator shall be the interval of time between the moment of crossing the starting line in full flight for the first time, after giving official notification of their intention to start, and the moment of crossing the same line after having flown around the Statue of Liberty.

In starting competitors must fly in the usual direction around the track, which they are at liberty to leave after passing the fifth pylon.

The flight must be completed before 5:30.

TOTALIZATION OF DURATION PRIZE—

$6,000.00

First —$3,000.00
Second— 1,500.00
Third — 1,000.00
Fourth — 500.00

This prize will be awarded in the above order, to the aviators who will have during the meeting remained in the air the greatest period of time; this to be determined by adding the time credited to each aviator under Daily Totalization of Duration.

In the case of two or more aviators having the same totalization of duration to their credit at the end of the meeting, the prizes shall be divided accordingly.

Time may be credited to this prize by the Committee as an award for other performances.

TOTALIZATION OF DISTANCE PRIZE—

$3,000.00

First —$1,500.00
Second— 1,000.00
Third — 500.00

This prize will be awarded in the above order to the aviators who will have during the meet covered the greatest distance, this to be determined by adding the distance covered in the hourly contests for distance throughout the meeting.

AMATEUR PRIZE

A silver cup of the value of $1,000 will be given to the amateur aviator whose total duration of flights during the meet shall be the greatest. In order to win the cup, the aviator shall have remained in the air throughout the Meet a minimum of five hours.

ALLAN RYAN,
GENERAL MANAGER OF MEET.

PRIZE FOR MECHANICS—$1,000.00

The Committee reserves the sum of $1,000 for the mechanics of the aviators engaged in the meeting as a recognition of the good will of these mechanics. In this connection the contestants will submit a list of their mechanics to the Committee the first day of the meeting. The conditions governing this prize will be published in the final regulations.

Michelin Trophy

During the course of the Meet an opportunity will be offered for any member of the Aero Club of America who desires to enter for the Michelin Trophy. Under the regulations governing competition for this trophy, it is to be awarded to the aviator, who during the year will have made the longest flight in a closed circuit without touching the ground. A prize of 20,000 francs (about $4,000) in cash goes with the trophy at the end of the year. It is at present necessary to exceed 197 miles—the distance made by Emile Aubrun at Bordeaux, on September 16th last,—to win the Michelin Trophy.

This will require more than the regular hours set aside for events in this programme and any aviator qualified to compete for this trophy who desires to do so, will have to give special notice to the Aviation Committee in order that his flight may be officially observed outside of the regular programme period.

J. C. MC COY,
CHAIRMAN [illegible]EST COMMITTEE.

The Scientific American Trophy

The Scientific American Trophy for heavier-than-air flying machines was offered by the *Scientific American* for annual competition under rules and regulations formulated and promulgated by the Aero Club of America in 1907.

The first trial for the trophy was held at Hammondsport, N. Y., on July 4th, 1908, by the Aerial Experiment Association of Hammondsport, N. Y. The minimum distance to be covered in 1908 was one kilometre (3,280 feet) and Glenn H. Curtiss in the "June Bug" biplane, made on this date a flight of 5,090 feet, which remained unbeaten that year, thereby winning for him the trophy for 1908.

This was also the first official public flight for a record made in the United States.

In 1909 the trophy was also won by Glenn H. Curtiss. On July 17th, he fulfilled the new conditions of the competition for that year by covering a minimum distance of 25 kilometres. The actual distance covered was 25.002 miles (in 52 minutes 30 seconds).

In further accordance with the deed of gift, providing that the minimum conditions for the yearly winning of this trophy shall be made progressive in their severity in conformity with the progress of aerial navigation, the 1910 conditions give the trophy for that year to the aviator who shall have made the longest flight—in point of distance—provided he be regularly entered for the trophy and that the distance be not less than forty miles across country.

Mr. Glenn H. Curtiss on May 29th, 1910, competed under these conditions and made a flight from Albany to Camelot, near Poughkeepsie, a distance of 74¼ miles. Unless this is exceeded before the end of the year by an aviator regularly entered for the trophy, Mr. Curtiss will, for the third year in succession, be awarded the trophy. This trophy may be competed for during the International Aviation Tournament at Belmont Park, on the 5th and 8th days of the Meet, provided twenty-four hours' notice is given to the Contest Committee.

Distribution of Profits

In addition to the prizes herein provided for, aviators are offered participation in profits, as determined by the Financial Committee of the Meet, to the extent of 70 per cent. of the first $100,000 of such profits and 40 per cent. of any sums beyond the first $100,000 of such profits, to be determined under the following plan:—

(1) In each event every aviator who actually makes a flight shall receive the number of points to which his rank in the contest entitles him, according to the Table of Points given below.

(2) The total number of points won in the Meet by each contestant shall be recorded.

(3) Each point won shall entitle the winner to one share of the amount to be distributed.

(4) The value of each share shall be determined by dividing the amount to be distributed by the total number of points won in all the events by all contestants.

(5) TABLE OF POINTS.

To the Winner	750
To Second best	500
To Third best	333
To Fourth best	250
To Fifth best	200
To Sixth best	166
To Seventh best	143
To Eighth best	125
To Ninth best	111
To Tenth best	100
To Eleventh best	91
To Twelfth best	83
To Thirteenth best	77
To Fourteenth best	71
To Fifteenth best	66
To Sixteenth best	62
To Seventeenth best	58
To Eighteenth best	55
To Nineteenth best	52
To Twentieth best	49
To Twenty-first best	47
To Twenty-second best	45
To Twenty-third best	43
To Twenty-fourth best	41
To Twenty-fifth best	39

the twenty-sixth best shall receive one less point than the 25th; the 27th one less point than the 26th, and so on, continually diminishing by one.

Calendar of Events

SATURDAY, OCTOBER 22ND.

Hourly Distance.....1:30 to 2:30
Hourly Altitude.....1:30 to 2:30
Hourly Distance.....2:45 to 3:45
Hourly Altitude.....2:45 to 3:45
Daily Duration.....1:30 to 2:30—2:45 to 3:45
Fastest Flight.....1:30 to 2:30—2:45 to 3:45
Grand Altitude.....4 o'clock
Cross-Country .....4 o'clock
Totalization of Duration, first day.
Totalization of Distance, first day.

SUNDAY, OCTOBER 23RD.

Hourly Distance.....1:30 to 2:30
Hourly Altitude.....1:30 to 2:30
Hourly Distance.....2:45 to 3:45
Hourly Altitude.....2:45 to 3:45
Daily Duration.....1:30 to 2:30—2:45 to 3:45
Fastest Flight.....1:30 to 2:30—2:45 to 3:45
Grand Speed (Preliminary Heats).....4 o'clock
Grand Altitude.....4 o'clock
Totalization of Duration, second day.
Totalization of Distance, second day.

MONDAY, OCTOBER 24TH.

Hourly Distance.....1:30 to 2:30
Hourly Altitude.....1:30 to 2:30
Hourly Distance.....2:45 to 3:45
Daily Duration.....1:30 to 2:30—2:45 to 3:45
Fastest Flight.....1:30 to 2:30—2:45 to 3:45
Grand Speed (Semi-finals if necessary)..4 o'clock
Grand Altitude.....4 o'clock
Totalization of Duration, third day.
Totalization of Distance, third day.

TUESDAY, OCTOBER 25TH.

Hourly Distance.....1:30 to 2:30
Hourly Altitude.....1:30 to 2:30
Hourly Distance.....2:45 to 3:45
Hourly Altitude.....2:45 to 3:45
Daily Duration.....1:30 to 2:30—2:45 to 3:45
Fastest Flight.....1:30 to 2:30—2:45 to 3:45
Cross-Country .....4 o'clock
Grand Altitude.....4 o'clock
Totalization of Duration, fourth day.
Totalization of Distance, fourth day.

WEDNESDAY, OCTOBER 26TH.

Gordon-Bennett Elimination.....1:30
Michelin Cup.
Scientific American Cup.
Grand Altitude.....4 o'clock
Cross-Country .....4 o'clock

THURSDAY, OCTOBER 27TH.

Hourly Distance.....1:30 to 2:30
Hourly Altitude.....1:30 to 2:30
Daily Duration.....1:30 to 2:30
Fastest Flight.....1:30 to 2:30
Statue of Liberty Flight.....2:45
Grand Altitude.....4 o'clock
Totalization of Duration, fifth day.
Totalization of Distance, fifth day.

FRIDAY, OCTOBER 28TH.

Hourly Distance.....1:30 to 2:30
Hourly Altitude.....1:30 to 2:30
Hourly Distance.....2:45 to 3:45
Hourly Altitude.....2:45 to 3:45
Daily Duration.....1:30 to 2:30—2:45 to 3:45
Fastest Flight.....1:30 to 2:30—2:45 to 3:45
Cross-Country Passenger Carrying.....4 o'clock
Grand Altitude.....4 o'clock
Totalization of Duration, sixth day.
Totalization of Distance, sixth day.

SATURDAY, OCTOBER 29TH.

Gordon-Bennett International.....8:30 A. M.
Michelin Cup.
Scientific American Trophy.
Grand Altitude.....4 o'clock

SUNDAY, OCTOBER 30TH.

Hourly Altitude.....11:00 to 12:00
Hourly Distance.....11:00 to 12:00
Fastest Flight.....11:00 to 12:00
Passenger Carrying..... 1:30 to 2:30
Cross-Country .....3 o'clock
Grand Speed (Final).....4 o'clock
Grand Altitude.....4 o'clock
Totalization of Duration, seventh day.
Totalization of Distance, seventh day.
Michelin Cup.
Scientific American Trophy.

Code of the Air

1st. Any contestant wishing to pass another must pass to his right, at a minimum distance of 75 feet, on condition, however, that the contestant about to be passed is no more than 150 feet from the inside of the course—the line connecting the pylons to be turned.

2nd. A contestant wishing to overtake another must follow the above rule unless he can pass above the other or below him.

He must not pass below another contestant unless the latter is at least 150 feet above the ground. If the contestant to be passed is less than 150 feet above the ground, the contestant about to pass him, may as stated above, fly to his right at a minimum distance of 75 feet or pass above him at an altitude at least 150 feet greater than his.

3rd. When two machines, of which one is passing the other on its right, are taking a turn on about even terms or are on the point of reaching one, it is imperative that the aviator on the inside makes no deviation from his course, in other words does not crowd toward the outside of the course, the contestant traveling faster than he who wishes to pass him. The two aviators must in any case so pilot their craft as to avoid an accident.

4th. At all times machines in flight should travel in the direction opposite to that of the hands of a clock, that is, leave the towers on the left hand, and it is positively forbidden for a machine to fly at any time counter track, that is to say, in the direction of the hands of a clock, even if they be within the area bounded by the towers which indicate the track.

5th. A machine which after landing for any reason is being towed to its shed must cross the track as quickly as possible in the most direct line, to the infield after making sure that it will not be in the way of any other aviator in so doing.

6th. Aviators are forbidden to fly over the public and above the stands.

7th. Violation of these rules will subject the delinquent to a penalty in accordance with the rules of the Fédération Aéronautique Internationale. In the event of a second offense the aviator may be disqualified from participating further in the Meet.

NEW FLYERS DESCRIBED

By W. H. Phipps

The 1910 Etrich Monoplane

The remarkable monoplane described in this article was designed and constructed by Igo Etrich, the noted Austrian engineer. It is the result of years of patient study and earnest scientific research.

Mr. Etrich, and Mr. Wels, with whom his name was linked during many years of fruitful experiment, are, as pioneers, looked upon in Austria as the direct successors of Lillienthal, many of whose principles they have adhered to.

Dimensions and details of the latest Etrich machine follow:

General Description

This single-surface flyer resembles in appearance the pigeon after which it is named. Mr. Etrich has embodied in this machine all the essential principles of his earlier models, and has sought to obtain automatic stability by the peculiar complicated construction of the flexible wings and tail, the last patent on which is referred to and illustrated in the May AIRCRAFT, (page 113 of this volume).

The wings are made in four sections, two of which are small and form part of the main fuselage and are shipped attached to it (see shaded portion of main wings). The other two sections SS, attach to these by the joints DD. The total spread of the main wings, including width of fuselage, is 14 metres, and their chord 3 metres, the carrying surface being 35 square metres.

The main rigid carrying surface measures really only 11 mètres spread, the flexible extensions at the ends acting simply as stabilizing ailerons. The fan-shaped wing-tips are constructed of bamboo and trussed in such a manner as to be capable of being parabolically curved. One should also note that the area of these ailerons can be increased at will by the tightening of the brace R. Their action is controlled by the wires T, operated by the pilot and is not left free as in many other machines. Considerable automatic lateral stability is produced by these upturned wing tips which grip the outwardly flowing air from the planes and steady the machine while in flight.

At the rear of the fuselage is situated the fan-shaped horizontal tail Q, constructed also of bamboo qq, capable of being warped up or down by wires controlled by the operator.

The vertical rudder consists of two triangular rudders pivoting on the vertical fins.

A 2m.20 Chauvière propeller is situated at the front of the fuselage and is driven by a 50 h.p. 4-cylinder Clerget motor.

The most important feature of this novel machine is the use of a biplane bridge truss for strengthening the wings (see diagram, top view).

In concluding this description it is interesting to note that two of these machines have been entered at the coming International Aviation meet at Belmont Park, and also to give a list of the flights already made with them.

On May 12, Mr. Etrich, with Lieutenant Hirsch as passenger, flew for 5 kilometres at a height of 10 metres.

On May 14, Mr. Illner piloted the same machine for 84 kilometres, in 1 hour 11 minutes, at a height of 1,000 feet.

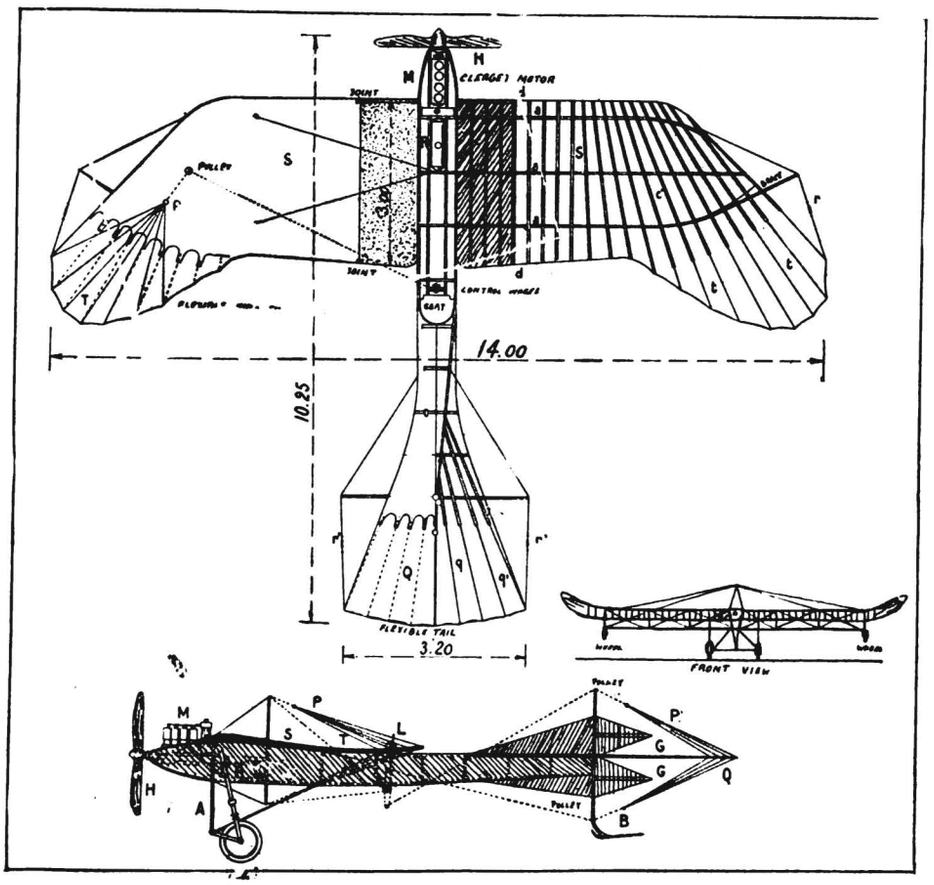

GORDON BENNETT BALLOON RACE

ST. LOUIS, OCTOBER 17, 1910

As AIRCRAFT goes to press, the start of the great yearly international balloon race is being given at St. Louis. The order of the start is as follows:

1. France (Jacques Faure); 2. America (J. H. Wade, Jr.); 3. Switzerland (Capt. Messner); 4. Germany (Lieut. Vogt); 5. France (Alfred Leblanc); 6. America (H. E. Honeywell); 7. Switzerland (Col. Schaeck); 8. Germany (Engineer Gericke); 9. America (A. R. Hawley); 10. Germany (Captain Abercron).

Winners in previous years were: 1906, America (Lieut. Lahm, balloon "United States," 401 miles); 1907, Germany (O. Erbsloh, balloon "Pommern," 872 miles); 1908, Switzerland (Col. Schaeck, balloon "Helvetia," 756 miles); 1909, America (E. Mix, balloon "America II," 700 miles).

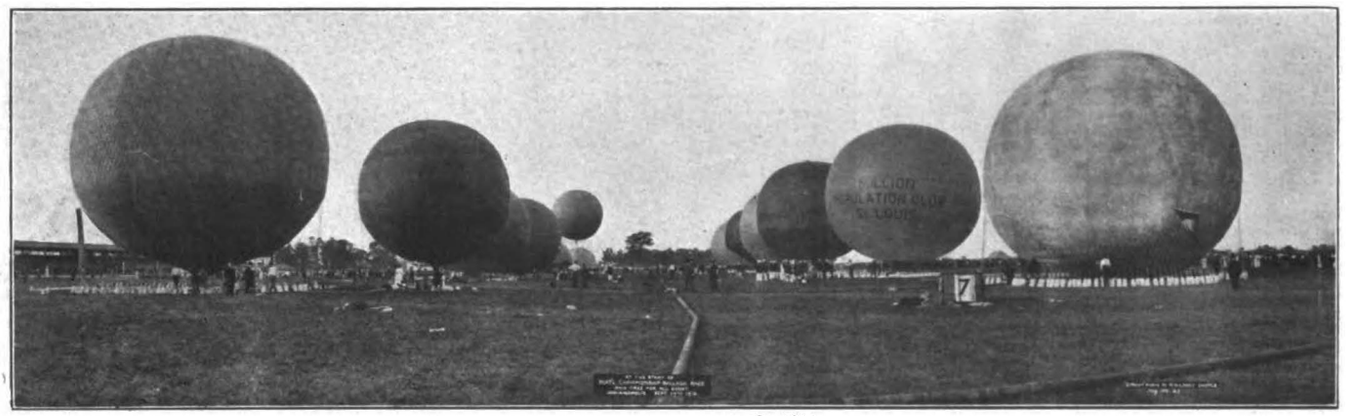

BALLOONS READY TO START IN ELIMINATION RACE HELD AT INDIANAPOLIS, SEPTEMBER 17, 1910, TO SELECT AMERICAN TEAM FOR GORDON BENNETT CUP RACE.

OFFICIAL RESULTS OF ELIMINATION RACE

Balloon	Manned by	Time of Start	Landed at	Time of Landing	Distance	Time Hours	Time Min.
America II	A. R. Hawley, Pilot Augustus Post, Aide	Sept. 17, 4.53 P. M.	Warrenton, Fauquier Co., Va.	Sept. 19, 1.15 P. M.	453 Miles	44	25
Centennial	H. E. Honeywell, Pilot Lambert, Aide	Sept 17, 5.39 P. M.	Brush Valley, Indiana Co., Pa.	Sept. 18, 5.15 P. M.	379½ Miles	23	36
Buck Eye	J. H. Wade, Jr., Pilot A. H. Morgan, Aide	Sept. 17, 5.52 P. M	Sowers, Floyd Co., Va.	Sept. 19, 7.30 A. M.	371 Miles	37	38
Million Population City	S. Louis Von Phul, Pilot J. M. O'Reilly, Aide	Sept. 17, 5.19 P. M.	Trafford, Westmoreland Co., Pa.	Sept. 18, 2.35 P. M.	343 Miles	21	16
Miss Sofia	W. T. Assmann, Pilot P. J. McCollough, Aide	Sept. 17, 5.02 P. M.	Mcfarlan, Ritchie Co., W. Va.	Sept. 18, 5.10 P. M.	269½ Miles	24	8
Pennsylvania II	A. T. Atherholt, Pilot C. B. Graham, Aide	Sept. 17, 5.38 P. M.	Dexter, Meigs Co., Ohio	Sept. 18, 10.30 A. M.	218 Miles	18	52
New York	Clifford B. Harmon, Pilot Thos. S. Baldwin, Aide	Sept. 17, 5.56 P. M.	Powellsville, Scioto Co., Ohio	Sept. 18, 12 M.	198 Miles	18	4
Hoosier II	Chas. Walsh, Pilot Samuel Reber, Aide	Sept. 17, 5.49 P. M.	West Milton, Miami Co., Ohio	Sept. 18, 12.55 A. M.	99 Miles	7	6

FOREIGN NEWS

Austria

There was some good flying at the Wiener-Neustadt Meet, which was attended by the Emperor.

The altitude prize was won by Warchalowsky with 460 metres. Illner on an Etrich monoplane (a description of which interesting machine appears on page 325), made a flight of 31 minutes.

England

On September 19th, 20th and 21st, exhibition flights were given at Folkestone by Cecil Grace, George Barnes and J. B. Moisant. On each day Mr. Grace made high flights, usually at an average height of 3,000 feet. Moisant, in his two-seater pigeon-tail Gnôme-Blériot, took up passengers, including several of the fair sex.

The Meet was marred by the serious accident which befell Barnes; he apparently sprang from his machine when it was twenty or thirty feet up, for some reason as yet unexplained, and was severely injured.

Ladougne (Goupy biplane), Paul de Lesseps (Blériot), Mamet (Blériot), Hélène Dutrieu (H. Farman), Bruneau de Laborie (H. Farman), were the Continental stars at the Doncaster Meet.

Both de Lesseps and Ladougne encircled the town and Hélène Dutrieu made some fine passenger-carrying flights on the last days of the Meet, in which she showed fine control of her biplane.

France

The attempts made by Weymann and Morane to win the Michelin Grand Prize of 100,000 francs are among the most interesting aeronautic ventures of the past month. Weymann's attempt at the difficult prize (the conditions of which are 240 miles across country with a passenger, ending on a mountain peak 5,000 feet high, in a maximum time of six hours) was perhaps the finest all-round cross-country performance accomplished to date. He actually came within seven miles of his goal and made his final landing at dusk in the heart of the volcanic Auvergne, at Volvic. All cross-country records were broken on this trip.

Morane's trial on October 5th ended in disaster. Because of the speed required for this prize he used a 100 H. P. 14-cylinder Gnôme-Blériot and left St. Cloud with his brother as passenger, at 9:40 in the morning; twenty minutes later the monoplane fell, both Moranes being seriously injured, and the peerless Léon being prevented from making his projected trip to America.

The world's height record has again been broken and this time a biplane has reconquered the laurels of which the Blériot monoplane had deprived the two-surface type of machine;—it was on October 1st at Mourmelon that Henri Wynmalen took his Gnôme-driven Henry Farman up 2,800 metres (9,186 feet)!

The first attempts to win the Grand Prix de l'Automobile Club de France (Paris-Brussels-Paris) were made on September 25th, when two Farman pilots, Loridan and Mahieu started out from Issy, each with a passenger; both had mishaps, however, and a further attempt the following day was not more successful. Although excellent flyers, Loridan and Mahieu are newcomers to the sport and have not the experience of such "old birds" as Paulhan or Latham.

M. Jacques de Lesseps, flying a Blériot, rose to a height of 2,170 metres on September 16th. He thus takes fourth place in altitude among the world's aviators, behind Henri Wynmalen, the late Geo. Chavèz and Léon Morane.

One of the most successful Meets so far held in France was that which took place at Bordeaux from September 11th-18th.

Nearly all the world's records made at Rheims were beaten there and this notwithstanding the much smaller perimeter of the Bordeaux aerodrome (2½ kilometres instead of 5 at Rheims).

Results of the Bordeaux Meet

Longest distance in a single flight:

1. Aubrun (Blériot) .....315 kil.
2. Simon (Blériot) .....380 kil.

Passenger Carrying:

1. Biélovuccie (Voisin) 60 kil. in 1 hr. 2 min. 1 sec.

Michelin Cup:

1. Aubrun (Blériot) .....317 kil.

Grand Altitude Prize:

1. Aubrun (Blériot).....2,100 metres
2. Legagneux (Blériot) .....1,520 metres

Totalization of Distance:

1. Thomas (Antoinette) .....2,100 kil.
2. Kuller (Antoinette) .....1,750 kil.
3. Simon (Blériot) .....1,165 kil.
4. Aubrun (Blériot) ..... 932 kil.
5. Biélovuccie (Voisin) ..... 850 kil.
6. Morane (Blériot) ..... 470 kil.
7. Martinet (H. Farman) ..... 389 kil.
8. Brégi (Voisin) ..... 292 kil.
9. Audemars (Bayard-Clément Demoiselle) ..... 268 kil.
10. Ruchonnet (Antoinette) ..... 252 kil.
11. Parent (Poulain-Orange) ..... 195 kil.
12. Legagneux (Blériot) ..... 70 kil.
13. Van den Born (H. Farman)..... 55 kil.
14. Paul (Voisin) ..... 50 kil.
15. De Mumm (Antoinette) ..... 22 kil.
17. Latham (Antoinette) ..... 22 kil.
16. Mollien (Blériot) ..... 37 kil.
18. Gibert (Blériot) ..... 20 kil.
19. Jullerot (H. Farman) ..... 5 kil.

Totalization of Altitude:

1. Morane (Blériot) .....18,930 metres
2. Legagneux (Blériot) .....14,902 metres
3. Tyck (Blériot) .....10,665 metres
4. Brégi (Voisin) ..... 9,085 metres

Speed—(25 Kilometre Race):

1. Morane (Blériot).....16 min. 2 4/5 secs.
2. Aubrun (Blériot).....16 min. 47 secs.

Cross-Country:

1. Morane (Blériot)

Officers' Prize:

1. Rémy (H. Farman) 110 kil. in 2 hrs. 8 min. 24 secs.
2. Féquant (H. Farman)
3. Chevreau (Wright)

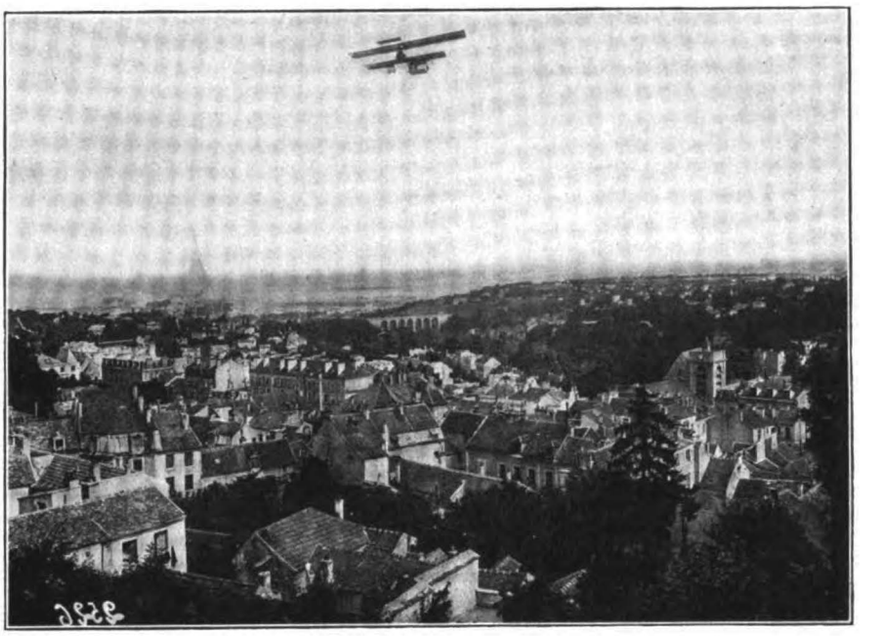

WEYMANN'S START ON HIS ATTEMPT TO WIN MICHELIN GRAND PRIZE.

Germany

There is great activity in the German Wright Company at present, as an arrangement has been arrived at between the above and the Allgemeine Elektrizitaets Werke of Berlin, which proposes to take up aeroplane building on an extensive scale—chiefly for military purposes—and has selected the Wright type of flyer. The Wright Company is about to open an aviation school at Johannisthal and has engaged a number of efficient teachers. Captain Englehardt and Lieutenant von Mossner are among the number. They are also taking part in the Metz-Trier cross-country flight, for which Thelen and Jeannin have also entered.

The Russian government has ordered 22 aeroplanes of the Aviatik type at Mulhausen; several of them have already been completed and dispatched to Russia.

Lindpaintner, piloting Sommer and Farman machines, swept the board during the Munich-Puchheim week, winning all six first prizes and beating Jeannin—who was hardly in his usual form—in every event contested in by both. Lindpaintner accomplished several fine performances, such as flying to Munich and manœuvring over the city; flying with Otto to Dachau and back, and accompanying the Parseval VI., which had come out to the aviation grounds, during the greater part of its journey home. The huge airship, with the aeroplane soaring high above it, afforded a wonderful picture to the onlookers and it is small wonder that the Bavarian capital was thrown in a high state of enthusiasm. Lindpaintner won the totalization prize with 4 hours 49 mins. 14 3/5 secs. Jeannin, Aviatik, was second, 2 hours 36 mins. 36 1/5 sec., and Otto, Aviatik, third, 1 hour 23 mins. 56 3/5 secs.

Italy

A new cross-country record for Italy was established by Leonino da Zara on September 13th. He flew from the Padua aerodrome to the Arno district—something over 100 kilometres.

On September 14th, Lieut. Savoia, on a Farman biplane, flew over Rome, causing great excitement in the Eternal City. This feat had never previously been undertaken.

Madagascar

The governor of this colony is planning a postal service between the capital and the coast.

Spain

Tabuteau's flights between the famous resorts on either side of the Franco-Spanish frontier—San Sebastian and Biarritz were very successful and created great enthusiasm; instead of taking a short cut over the sea—the pocket of the Bay of Biscay—Tabuteau kept over the land and flew over the foot hills of the Pyrnnees; he passed the historical frontier stream, the Bidassoa, at a great height, the Renault motor of his speedy Maurice Farman running without a hitch throughout the trips.

Switzerland

Another thrilling page was added to the history of the Conquest of the Air when George Chavèz flew across the Alps—a page which contains perhaps more of heroism, of tragedy and of pathos than any of those which preceded it. It was just as he was landing at Domodossola, after having conquered the glaciers and snow peaks, that the accident happened which ultimately robbed the world of one of its greatest air-conquerors. The flight from Brigue over the Simplon Pass was made on September 23rd, Chavèz succumbing four days later from the injuries he sustained when his monoplane capsized upon landing. Henry Weymann made a plucky attempt to make the flight from Brigue, with a specially-built Farman biplane, but was unable to gain the requisite altitude to get across.

NEWS IN GENERAL

By Ada Gibson

If the success attending the proposed transatlantic dirigible trip by Walter Weilman is as great as the ingenuity displayed in the various details of construction of the great craft now at Atlantic City, Wellman and Vanniman will without doubt accomplish their task.

Naturally, no one would welcome the success of this scheme more than this magazine, but its chances are so remote that we venture to doubt if it will further the cause of aerial navigation. Swept before a powerful gale the "America" might conceivably reach Ireland or Portugal, but the behavior of the equilibrator is the "X" of the undertaking, and as it is to drag through the sea it would seem as if the impossible combination of a high wind and a calm sea were a sinê quâ non of ultimate success. It would certainly be a great pleasure to have to acknowledge that we are wrong in all this, but if all previous undertakings of a similar nature are taken into consideration, the chances of crossing the Atlantic Ocean in such a craft would appear to be less than one in forty.

In the various contrivances embodied on the "America," Vanniman has surpassed himself in engineering skill, and the dirigible is superior in every way to what it was when engaged on its last venture: the attempt to reach the North Pole from the northwestern part of Spitzbergen; this feat, however, seems much easier of accomplishment than the crossing of the Atlantic, if only for the two primary reasons that the continuous July day in the Arctic regions obviates the great day-and-night changes of temperature of our latitudes and that an ice-surface, however rough and hummocky, must be less jarring to an equilibrator than the wind-swept surface of the seething ocean.

The greatest French and German dirigibles are tried out for weeks before being set to undertake a given task, especially if they are of new design; but the "America" is apparently expected to make the most wonderful distance and duration world's records of the German airships look ridiculous, with little or no previous experimenting: more than any other feature of the undertaking does this call for criticism, although it is not sufficient to make one doubt the sincerity of the participators in the enterprise.

The working and rôle of the wireless equipment will be watched with interest.

On September 29th, Walter R. Brookins, the first-string man on the Wright team, made history when in a magnificent seven-hour effort he flew from Chicago to Springfield, Ill., a distance of 187 miles, with two stops. His progress is shown in the following time table:

Place.	Miles.	Time a.m.	Place	Miles.	Time p.m.
Chicago	0	9:16	Thawville	89	1:00
Kensington ...	13	9:36	Roberts	94	1:09
Harvey	19	9:45	Melvin	99	1:18
Flossmoor ...	23	9:55	Guthrie	105	1:28
Matteson	27	9:58	Gibson	109	1:36
Monee	33	10:10	Harpster	114	1:45
Peotone	39	10:22	Belleflower ...	121	1:55
Monteno	45	10:34	Wiedman	127	2:07
Tucker	50	10:42	Parnell	135	2:20
Bradley	53	10:50	Birkbeck	143	2:33
Kankakee	54	10:53	Clinton	147	2:41
Otto	59	11:00	Chestnut	162	3:07
Chebanse	63	11:07	Mt. Pulaski (stop).....	168	3:20
Clifton	68	11:16			
Ashkum	71	11:23			
Danforth	77	11:38	Mt. Pulaski (start).....		3:43
Gilman (stop).	80	11:43	Lake Fort....	172	3:53
		p.m.	Buffalo Hart..	178	4:05
Gilman (start)		12:42	Springfield ...	187	4:25
Ridgeville	85	12:51			

It will be noticed that between Gilman and Mt. Pulaski Brookins broke the American cross-country duration and distance records for a continuous flight: 2 hours 38 minutes, as opposed to Hamilton's 1 hour 47 minutes, and 88 miles as against Hamilton's 86 miles (Hamilton's records having been made in his New York to Philadelphia flight of July 13).

This performance places Brookins as a cross-country flyer in the same class as the great European cracks: Paulhan, Weymann, Latham, Leblanc, Aubrun and Grahame-White. It is also the longest flight Brookins has ever made under any circumstances.

Clifford B. Harmon, who won all the contests open to amateurs at the Harvard-Boston Aviation Meet, and incidentally carried off trophies to the

value of over $7,000, has signified his intention of competing for the trophy offered by the Rumson Country Club, of Seabright, N. J., by filing his entry with H. S. Borden, secretary of the club.

Although this competition is open to all amateurs and only calls for the winner to rise from the club grounds, remain in the air for half an hour, and alight in the same grounds, Mr. Harmon's entry is the only one so far received.

Mr. Harmon will, at the same time, endeavor to win the cup to be presented by the "New York Times" to the first amateur aviator who successfully flies from the Rumson Country Club to Governor's Island, a distance of about thirty miles, two-thirds of which are over water.

"Tod" Shriver is the latest American to become a real flyer. He completed his apprenticeship as a man-bird at Mineola in a very few days and earned his pilot license on September 17 with consummate ease. He drives a Dietz-Shriver biplane, fitted with a 6-cylinder Kirkham motor; the excellent behavior of this engine has not as yet given him the opportunity to ascertain his ability as a glider in case of emergency.

He did some very fine high flying before leaving for Wilmington, where he sustained the unfortunate accident in which he broke an ankle.

Grahame-White has, since his arrival in New York on September 20, been making periodical flights at Mineola in Clifford B. Harmon's Farman machine.

On one occasion, after rising to a height of several hundred feet and circling the flying grounds several times, he flew over the State Fair in progress at Mineola. His appearance created much excitement among the crowds gathered there.

Among the ladies who have recently flown as passengers of Grahame-White are Pauline Chase, the actress; Miss Irene Fenwick, Miss Mabel Briggs and Mrs. Frank Janney.

Hugh L. Willoughby has made several successful flights of late in his "War Hawk" at Atlantic City.

Joseph Seymour, whose fame as an aviator bids fair to equal that achieved by him as an automobile racer, is another who has been flying well. His progress, however, has been somewhat delayed by an accident sustained at Oneonta, N. Y. Seymour was slightly hurt.

Dr. H. W. Walden, who was recently injured in the wreck of his monoplane at Mineola, has now entirely recovered from the effects of his fall and has just put up a factory adjoining the Aeronautical Society's shed at Mineola for the purpose of manufacturing the Walden-Dyott monoplane. The reconstructed machine has a fixed tail and a front rudder and is driven by a 35 H. P. Anzani motor. The landing gear consists of three 20x4 inch Pennsylvania wheels.

MRS. BESSICA RAICHE,
THE FIRST WOMAN TO PILOT AN AEROPLANE IN AMERICA.

Dr. William Greene has completed another 'plane and at this writing is making practice flights almost every day at South Park, Rochester, N. Y. The new machine is the largest ever built by Dr. Greene, the upper plane having a spread of nearly forty feet. Like all of his previous machines the perfection of detail is remarkable, and the balance so fine that it flew on a perfectly level "keel" at first attempt. The present power equipment is a forty h.p. Elbridge "Featherweight" engine, which turns a wide propeller 8 ft. 6 in. diameter, 3 ft. pitch, at 1100 r.p.m., developing a thrust of 350 lbs. Dr. Greene expects to enter the Belmont Park events.

A great deal of favorable comment has recently been expressed in connection with Fox De Luxe motors and the tests which have just been completed at Mineola, by the chief tester of the company and in connection with some flights made by Mrs. Bessica Raiche for the French-American Aeroplane Company.

There are several special features about Fox De Luxe aero motors, among which might be mentioned the Fox fourth port accelerator which gives the operator a wide range of control, and the radiator is attached directly to the engine at the forward end and circulation is increased by a pump so that a minimum amount of water is carried. A fan is also used to enable the operator to run the motor before making flights.

This motor is manufactured by the Dean Manufacturing Company, "South Cincinnati," Newport, Ky.

The longest flights ever made in this country by a novice was recently made by William Evans in the vicinity of Kansas City, where, in the presence of a large number of spectators, he flew cross-country for a distance of thirty miles at a height averaging 300 feet, descending only because an obstruction in his fuel tank stopped the flow of gasoline to the carbureter. The flight was the more surprising in that Mr. Evans had only received the machine two days before and expected only to hop across the field, and not to attempt any real flights for a few days. His machine is a Greene biplane equipped with four cylinder Elbridge motor.

The first flight to be made in America by an aeroplane with a woman as pilot took place on September 16th last, at Mineola.

Mrs. François Raiche was the plucky pioneer: she drove one of her husband's well-known biplanes in which was installed a Fox motor of forty H. P. She only got off a few feet on her first attempts and made a bad landing on the last one, that day: nothing daunted she was out again ten days later, and this time made an undeniable flight, driving with great coolness and judgment.

Mrs. Raiche is a Wisconsin woman and a thorough sportswoman. She is a good shot, a powerful swimmer and an excellent whip; she has also had much experience in motoring at the wheel of fast cars.

One of AIRCRAFT's editors had occasion to call on Mr. Hugo C. Gibson at his propeller works, in New York, the other day; he recommends the visit to anyone who would doubt the future of the aeronautic industry,—as a sure cure for his scepticism. In Europe, the tremendous animation and industry apparent in the big aeronautic factories had more than little impressed him; it was agreeable to receive a similar impression from an American concern; perhaps Mr. Gibson's regard for French methods and workmanship, as vindicated by French successes, has not a little to do both with the similarity in the impression received and its underlying cause: successful and appreciated construction. In France, aviators are heard to remark: my propeller is "just as good as a Chauvière"; the other day at Mineola one "fledgling" confided that *his* propeller was "just as good as a Gibson," which only means that H. C. G. has *arrived*.

In the small forest of propellers in all stages of completion perhaps the most impressive specimen was a huge 14-footer intended for a big biplane out West.

SOME CONSTRUCTION DETAILS

By W. H. Phipps

Fig. 1. Illustrates an ingenious joint used on the English Short machine.

Fig. 2. Shows an improved elevator joint made by the Mineola Specialty Company and now fitted to the new Baldwin double surfaced racing biplane. It consists of a piece of 1-inch tubing bent around a smaller tube; the whole brazed and strengthened as shown.

Fig. 3. Shows another of the Mineola Specialty Company's fittings used on the Baldwin biplane.

Fig. 4. A side view of the De Pischoff-Werner monoplane, showing the many novel features embodied in its construction. This is the only machine now flying fitted with a clutch which permits the operator to start his flight without the assistance of mechanics. A photo of this interesting machine in flight appears on page 253 September AIRCRAFT.

Fig. 5. Illustrates the new ailerons fitted to the latest Curtiss speed machine, which are operated by a shoulder control as in former models.

Fig. 6. Shows the new single surface front rudder used on the new racing Curtiss.

Fig. 7. Shows the seating arrangement and mechanism of the De Pischoff-Werner monoplane.

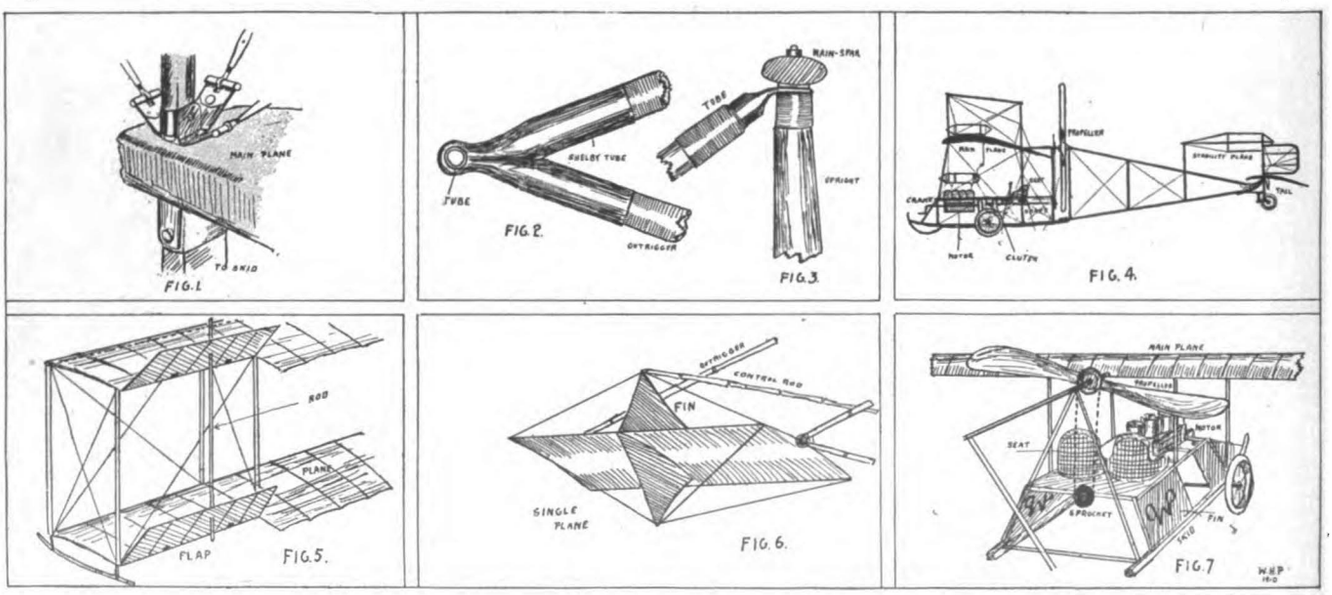

CLASSIFIED ADVERTISING

10 CENTS A LINE — SEVEN WORDS TO LINE — CASH WITH ORDER

AERONAUTS! ATTENTION!

I HAVE discovered the only way to rubberize your balloon or airship. Will not crack in cool or warm weather. A correct blue print on how to set up your gas-generators and purifier. Also directions on how to make hydrogen gas fully explained, with blue print showing how to cut an airship-bag cigar-shape. I will sell the formula on my rubberized coating which contains pure rubber, and explain the drying process; pattern cutting, sewing the balloon, rubberizing seams; I explain everything from cutting the raw material to the inflation of your airship. Blue prints and neatly typewritten description of the above: $2.00. Best coating for Aeroplanes. I positively guarantee satisfaction. All orders filled same day they are received. Jos. F. Bush, Aeronautical Engineer, 385 Carrie St., Schenectady, N. Y.

CO-OPERATION WANTED

INVESTORS' OPPORTUNITY; NEW MECHANICAL COMBINATION, CYCLONIC LIFT and POWER GLIDE for PRACTICAL FLYING. COMMERCIAL PROSPECTS. LATEST—GREATEST—SAFEST—MOST PERFECT and REMUNERATIVE CYCLOPLANE FLYING PROPOSITION to OFFER INVESTORS. ADDRESS C. B. MELOTT, YONKERS, N. Y.

WILL any owner or manufacturer of biplanes furnish me machine and expenses. Will enter any competition and divide earnings. Address F. M. C., care AIRCRAFT.

ADVERTISER desires backing to learn practical operation of aeroplanes. Will give security and interest in future operations if desired. Details to responsible party on request. Address "R.," care AIRCRAFT.

FOR SALE

FOR SALE—15% of Johnstown Airship Stock. A new style airship has been built, different from all others. No infringement on any other aeroplanes. Waiting for a new aerial engine. If you are interested, hear all about it, write to the Johnstown Aero Co., 305 Franklin St., Johnstown, Pa.

BIPLANE Glider for sale. Has 150 sq. ft. supporting surface. Weighs but 50 lbs. Price, $50.00. Harvey L. Salls, 29 Spring Garden St., Pawtucket, R. I.

AERONAUTIC Motor, 28-32 H.P., weight 140 lbs. Brand new. Immediate delivery. Price, $500.00. Address Box 321, Mineola, L. I.

BLERIOT XI monoplane, latest type, new and complete in every detail, numerous spare parts, owner buying passenger machine. $2,500.00. R. Timberlake, 7 Berthelet St., Montreal.

MOTOR FOR SALE—35 H. P. Water-cooled. Has made fly an 800 lb. aeroplane, (for which building a 50 H. P. motor same design). Good as new. Gives 260 lb. thrust. Weight 165 lbs. Condition guaranteed O. K. Should be used on, and of ample power for 600 or 700 lb. machine. Price $500. Write quick if wanted. Address Box 188, Monett, Mo.

WITH a view to getting more powerful machine would sell genuine Curtiss biplane, MADE BY CURTISS at his Hammondsport factory, complete with regular 4-cylinder water-cooled Curtiss motor. Immediate delivery. Address "Biplane," % Aircraft.

FOR SALE—Blériot monoplane, 24 horse power Anzani motor, imported from Blériot factory this year. Will be sold big sacrifice by Aviation Company, closing up its business. Box 727 % Aircraft.

MISCELLANEOUS

WANTED—To trade for aeroplane, twenty-two-mile Speed Boat, six cylinder, sixty-horse-power engine, self-locking, reverse gear, automobile control; complete in every particular. Used three months; perfect order. Address Box 746, care AIRCRAFT.

DO you wish an extremely light weight young man to assist you in aeronautical work? Great enthusiast. Address Enthusiast, care AIRCRAFT, 37-39 East 28th Street, New York, N. Y.

MECHANIC; a young man at present employed by a well-known aeroplane company, would like to receive offers from private parties needing the services of an able man with a thorough knowledge of aeroplane and engine construction and operation. M. B., care AIRCRAFT.

KITES—Patents for sale on two of the best flying kites made. 1st: Patent on Conyne's new King Kite for sale outright. This kite fills a long felt want in the kite line. Made of cloth, easy and cheap to manufacture, a good flyer, will roll up. 2nd: The exclusive right or license to manufacture, use and vend, kites smaller than 36 in. high under Patent No. 698,634, granted April 29, 1902. This patent has been sustained by the U. S. Circuit Courts. It is known from ocean to ocean as the Conyne Kite. The manufacturer with these two kite patents would be able to control most of the Toy Kite business of the United States. For information, Silas J. Conyne, 3508 McLean Ave., Chicago.

AM CONSTRUCTING a Curtiss Type Aeroplane to be used for exhibition purposes and want a reliable Aero Motor 35-45 H. P. Will divide net returns and give security for motor. E. Frankowsky, Box 47, Pueblo, Colo.

MODEL AEROPLANE. Instructive to experimenters. Self-propelled. Flies considerable distance. 50c prepaid. Miniature flying machines as souvenirs for aviation meets at very low figures for large quantities. Sample 25c. Agents wanted. Aeroplane Mfg. Co., 309 15th St., Brooklyn, N. Y.

THE handsome trophy shown below was given by THE SCIENTIFIC AMERICAN for the purpose of stimulating aviation in the United States. It is fitting that the first and only noteworthy trophy of this sort should be offered by a journal which, for more than 60 years, has fostered the development of aeronautics and the mechanical arts, not only in America, but throughout the civilized world.

THE SCIENTIFIC AMERICAN TROPHY commemorates Prof. S. P. Langley's aeroplane—the first successful machine in America and the precursor of the modern monoplane.

The Scientific American Aeroplane Trophy

Our trophy has been thrice won by Glenn H. Curtiss, to whom it will be awarded unless his record cross-country flight of 74¼ miles from Albany to Poughkeepsie is beaten before the end of the year.

The trophy will be competed for at the Belmont Park Meet; and the maker of the longest cross-country flight above 74 miles (40 miles out and 40 back, or two round trips of 40 miles each, for example) will win the trophy from Curtiss.

CUT OUT HERE

Keep posted upon Aeronautic events.

Read the Scientific American for the next fourteen months at the cost of but twelve months' subscription.

By cutting out this coupon and mailing it to us before November 15th, together with $3.00, we will send you the paper from the present time until January 1st, 1912.

Accept this offer immediately. Don't delay. Sample copy sent upon request.

MUNN & CO., Inc., 361 Broadway, New York